NON-CONTACT SEISMOLOGY ON ASTEROID 99942 APOPHIS. P. Sava[1], E. Asphaug[2], [1]Center for Wave Phenomena, Colorado School of Mines, Golden, CO 80401, psava@mines.edu, [2]Lunar and Planetary Laboratory, University of Arizona, Tucson AZ 85721, asphaug@lpl.arizona.edu.

Introduction: The interior structure of small planetary bodies holds clues about their origin and evolution, from which we can derive an understanding of solar system formation. Structure can be evaluated indirectly from surface observations, e.g. that asteroid 25143 Itokawa is a rubble pile [1] or that comet 67P/Churyumov-Gerasimenko is a primordial agglomeration of cometesimals [2]. However, these inferences are contested and uncertain, and their implications are important. They shape ideas about how the solar system is formed, e.g. quiescently or violently, and how small bodies such as near-Earth asteroids respond to collisions. Knowledge of small body interior structure is also driven by practical considerations, for the deflection of hazardous NEOs, and access to resources in space.

High resolution geophysical interior imaging of a small body like 99942 Apophis could, in principle, be done using either radar waves for dielectric properties, or seismic waves for elastic properties. Radar investigation could be efficiently conducted from an orbiter, but radar waves are unlikely to penetrate deep in the interior of a rocky body. In contrast, seismic investigation could provide information about its deep interior, but to be cost-effective acquisition would also have to be conducted from orbit, without landers and surface contact.

Terrestrial 3D seismic imaging exploits two main deployment opportunities: seismic instruments are tightly coupled to the ground, and large groups of seismometers or geophones form dense acquisition antennas. Neither condition can be satisfied with conventional seismic instruments on 99942 Apophis. Technology for anchoring seismometers to its surface does not yet exist, and the complexity of landed packages raises the mission cost and increases its risk. Moreover, costly landed seismometers would not be mobile and would acquire seismic data only at a handful of locations around the body, without sufficient density to assemble a broad acquisition antenna.

Vibrometry: We propose [3] to eliminate the need for surface deployment by employing laser Doppler vibrometers (LDV) that sense ground motion remotely from the Doppler shift of a reflected laser beam. LDVs used as seismometers have multiple advantages over landed seismometers: (1) take measurements from orbit, – no need for expensive landers; (2) operate without direct contact with the ground – no need for complicated anchors; (3) have simple electronic design – no fragile mechanical components; (4) are mobile – can sense ground motion at multiple locations; (5) operate from stable orbital platforms – no need for shielding, or onboard power and communication. These benefits simplify the design and execution of a seismology mission, while providing data with broad spatial coverage capable, in principle, to image in detail the 3D interior structure of a small body like 99942 Apophis.

Laser Doppler vibrometers use the Doppler principle [4] and do not rely on sensitive mechanical components whose performance requires complex environmental shielding (e.g. thermal) as for the performant Insight seismometer [5]. The basic components of LDVs are known and have been used in prior space missions.

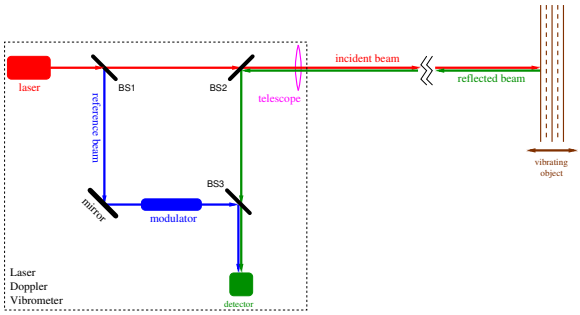

Figure 1: Key components of a laser Doppler vibrometer system: laser (red), modulator (blue), detector (green), telescope (magenta), beam splitters and mirrors (black).

The LDV operating principle is straightforward (Figure 1): a laser beam of known wavelength is split into reference and incident beams. The incident beam is focused using a telescope on a distant vibrating surface of a small body. The reflected beam (green), has a different wavelength as a result of the Doppler effect caused by ground motion; the frequency shift is proportional with the ground velocity in the direction of the laser beam. The reference and reflected laser beams are combined to form a composite signal with frequency modulated by the mismatch between their frequencies. An onboard demodulator extracts the frequency shift, thus allowing direct access to the ground velocity in the direction of the laser beams. Multiple laser beams from separated LDVs measurements provide complementary projections of the ground velocity, which facilitate acquisition of the full ground velocity vector [3].

LDVs are commonly used in industrial applications and instruments tuned for different operating distances are readily available commercially off-the-shelf. For example, the Polytec RSV150 LDV (Figure 2) can sense velocity <0.5 μm/s/$\sqrt{Hz}$ at distances >300m; the sensor and controller weigh ~15kg, have a combined volume

of ~20L and use ~75W of electrical power. With plausible engineering, such instruments can be adapted to take seismic measurements at much longer distances (e.g. ~2km). Conversely, instruments of significantly smaller mass/volume/power can be used to take seismic measurements from shorter observation distances.



Figure 2: Long-range COTS LDV (www.polytec.com).

Acquisition: Many seismic acquisition configurations are possible by exploiting the mobility of orbital LDVs that can sample ground motion at multiple surface locations. Here we discuss basic concepts defined with respect to the distribution of sources and receivers, although other implementation concepts are possible:

- **Concept 1:** multiple impacts or blasts (Figure 3a). The s/c generates seismic sources by sending multiple impactors or generating small blasts at several locations around the asteroid. The s/c also executes a slow rotation around the asteroid to allow an onboard LDV to sense ground motion at different locations relative to the source. Pros – simple implementation. Cons – few seismic source points, i.e. no acquisition antenna.
- **Concept 2**: persistent ground source (Figure 3b). The s/c carries only one source which is delivered to and embedded into the asteroid; this source is activated at multiple times, i.e. it is persistent, and generates repeatable ground motion at the same location. The s/c executes a slow rotation around the asteroid to facilitate ground motion at multiple locations on the surface. Pros – repeatable source at known position; dense acquisition array. Cons – single source point and complex ground coupling.
- **Concept 3**: natural sources only (Figure 3c). This approach relies on native, random seismic sources, for instance tidal activity, or the sorts of events creating activity on asteroid 101955 Bennu [6]. A secondary s/c separates from the main s/c; both carry LDVs, and thus can sense ground motion at different locations simultaneously. The s/c execute different slow orbits around the asteroid and thus acquire ground motion at multiple combinations of points, thus enabling passive seismic imaging [7]. Pros – no active source needed; multiple pairs of source/receiver pairs distributed at many locations. Cons – requires natural sources.

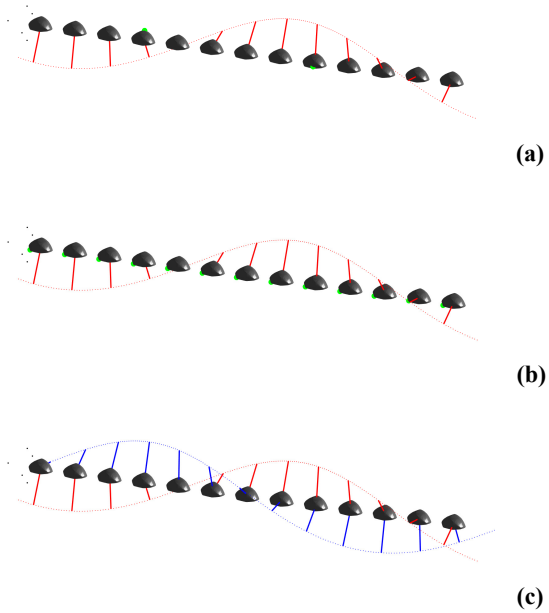

Figure 3: Seismic acquisition concepts depicting sources (green) and LDV receiver s/c (red & blue): (a) multiple impacts or blasts at different locations; (b) persistent ground source at fixed location and (c) natural sources only. The receiver s/c match the asteroid speed and execute a slow rotation around the body to achieve multiple view angles.

Conclusions: Laser Doppler vibrometers (LDVs) are advantageous over conventional seismometers because they: (1) measure ground motion from orbit; (2) do not require landing and anchoring; (3) do not use mechanical components; (4) are mobile and can relocate around the body; (5) operate from stable and robust orbital platforms. For small bodies observed from kilometer distances, they can enable geophysics missions that avoids the complexity and mass of landed payloads. They can provide sufficiently dense global seismic acquisition to allow deep interior imaging using techniques such as high resolution wavefield migration and tomography [8,9].

Acknowledgment: This work was supported by the NASA Planetary Instrument Concepts for the Advancement of Solar System Observations (PICASSO) program (NNH16ZDA001N).

References: [1] Fujiwara A. et al. (2006), *Science 312,* 1330-1334. [2] Massironi M. et al. (2015), *Nature 526,* 402-405. [3] Sava P. & Asphaug E. (2019) *Adv. Space Res. 64,* 527-544. [4] Donges A. & Noll R. (2015) *Springer*. [5] Lognonné, P. et al. (2019), *Space Sci Rev 215,* 12. [6] Lauretta et al. (2019), *Science 366,* eaay3544. [7] Wapenaar, K. (2004), *Phys. Rev. Let. 93,* 254301-1-254301-4. [8] Sava P. & Asphaug E. (2018) *Adv. Space Res. 61,* 2198-2213. [9] Sava P. & Asphaug E. (2018) *Adv. Space Res. 62,* 1146-1164.